BIKEEPER
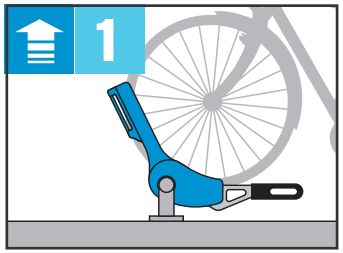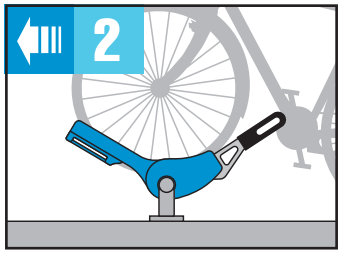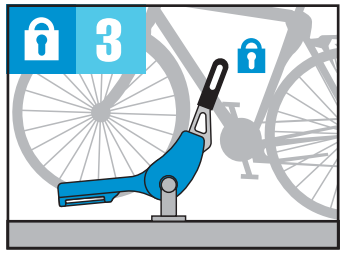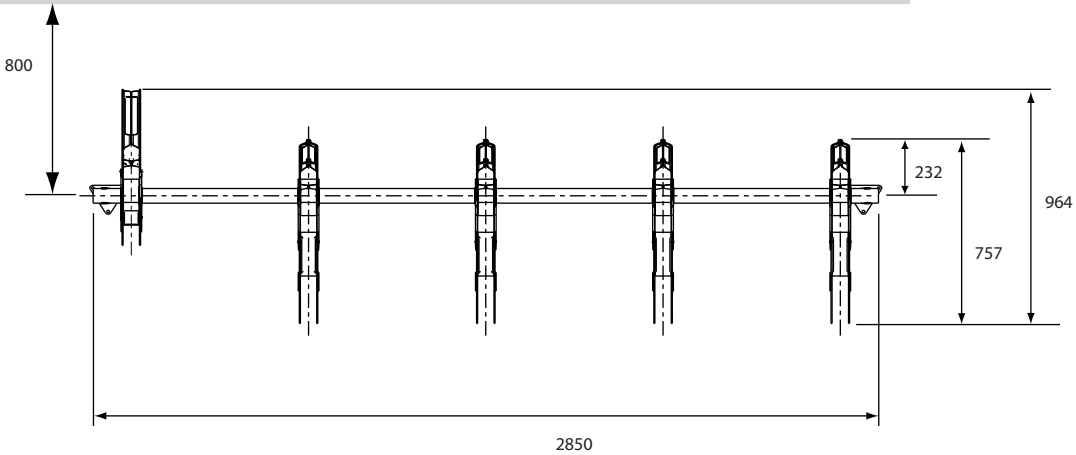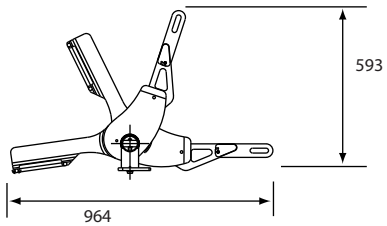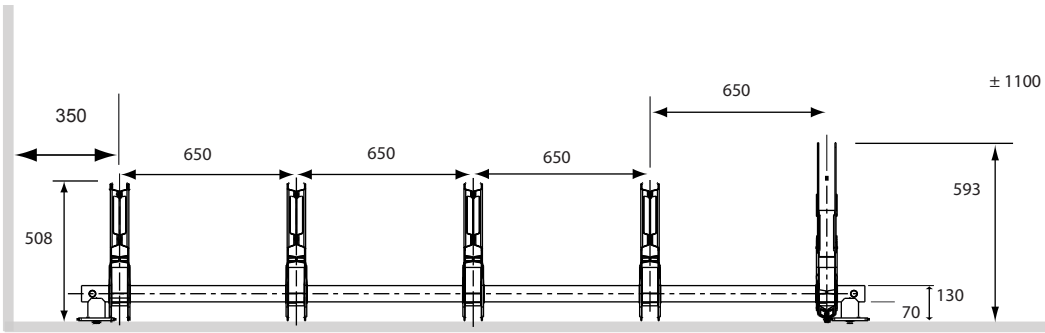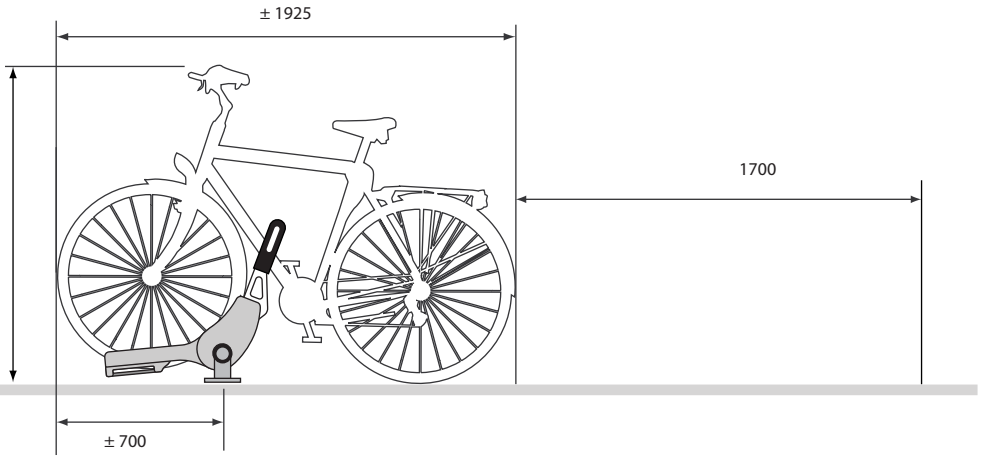
Penta